THE TECHNICAL AND ARTISTIC DRAWING - A TOOL IN TRAINING AND INTERDISCIPLINARY COMMUNICATION FOR LANDSCAPE ARCHITECTURE DESIGNERS

DESENUL TEHNIC ŞI ARTISTIC – UN INSTRUMENT ÎN INSTRUIREA ŞI COMUNICAREA PROIECTANȚILOR DE ARHITECTURĂ PEISAGERĂ

GRECU Codrina[1], PURCARU A.[2]
e-mail:codrina.grecu@gmail.com

***Abstract**: Among subjects who completed training curricula of first year landscape students are Descriptive Geometry and perspective, Representations and Composition. All this is a mandatory first step in training future landscape specialists, given that admission to college does not require prior training of students in this field. Profession of landscape, as the architect, involves a combination of several skills and competencies, among them the power to imagine, design and correctly represent the spatial composition of Landscape Architecture, playing the role of intermediary between project design and execution. Therefore the question arises which are the best subjects suited to develop these qualities. The paper presents and discusses briefly the shortest path from idea to action - technical drawing and perspective one.*
***Key words:** technic drawing, art drawing, architectural representation, design of built landscape*

***Rezumat.** Printre disciplinele care completează curricula de pregătire a studenților peisagişti de anul I sunt Geometria Descriptivă şi Perspectivă, Reprezentări, dar şi Compoziție. Toate acestea reprezintă o primă etapă obligatorie în instruirea viitorilor specialişti peisagişti, având în vedere faptul că admiterea la facultate nu cere o pregătire prealabilă a studenților în acest domeniu. Meseria de peisagist, ca şi cea de arhitect, presupune întrunirea mai multor abilități dar şi competențe, între acestea fiind puterea de a imagina, concepe şi reprezenta corect o compoziție spațială de arhitectură peisageră, jucând şi rolul de intermediar dintre schița de proiect şi executant. Prin urmare se pune întrebarea care sunt disciplinele cele mai indicate să dezvolte toate aceste calități. Articolul prezintă succint şi dezbate cea mai scurtă cale de la idee la faptă – desenul tehnic dar şi cel în perspectivă.*
***Cuvinte cheie:** desen tehnic, desen artistic, reprezentarea arhitecturală, designul peisajului construit*

INTRODUCTION

In the technical universities, Technical drawing and Descriptive geometry disciplines is compulsory for students to take from the first year of

[1] S.C. AC STUDIO S.R.L. Iasi, Romania
[2] "Gheorghe Asachi" Technical University of Iaşi, România

study, because of the specific applicative and technical character, but also because of the need to representate of abstract processes, technologies or other objects and structures design for each of the specialties.

In the Faculty of Horticulture from Iaşi, Department of Landscape Architecture, in the curricula of study, exist a range of disciplines ment to develop space view, artistic sense and students imagination, and also the ability to draw spatial objects in plan and three-dimensional representation.

MATERIAL AND METHOD

It became apparent to us that architecture Is generally assumed to be a highly specialized system with a set of prescribed technical goals rather than a sensual social art responsive to real human desires and feelings. This limitation is most frighteningly manifested in the reliance on two-dimensional diagrams that lay more stress on the quantifiable features of building organization than on the polychromatic and thridimensional qualities of the whole architectural experience. - Kent Btoomer & Charles Moore

The only way you can build, the only way you can get the building into being. Is through the measurable. You must follow the laws of nature and use quantities of brick, methods of construction, and engineering. But in the end, when the building becomes part of living,it evokes unmeasurable qualities, and the spirit of its existence takes over. - Louis Kahn

Given these statements of some practitioners and philosophers of architectural thinking, emphasize that every creative thought witch will be built and put into practice by a worker or by the author himself, need a measurable representation more or less abstract, on paper or electronic support. The classical system of 2 sizes representation is scrubber technical drawing (fig. 1), and the 3-dimensional representation is axonometric and perspective drawing (fig. 1, 2) (Ciolacu and Şerban, 2013; Enache and Ionescu,1983).

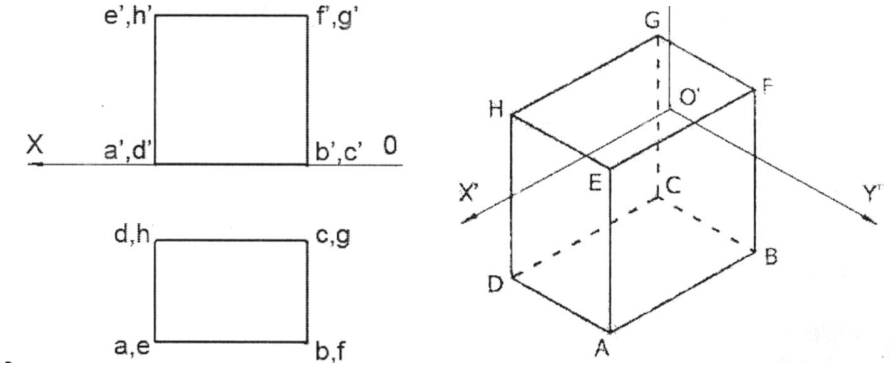

Fig. 1 – 2D scrubber representation (left) and 3D axonometric representation (right) (Ciolacu and Şerban, 2013)

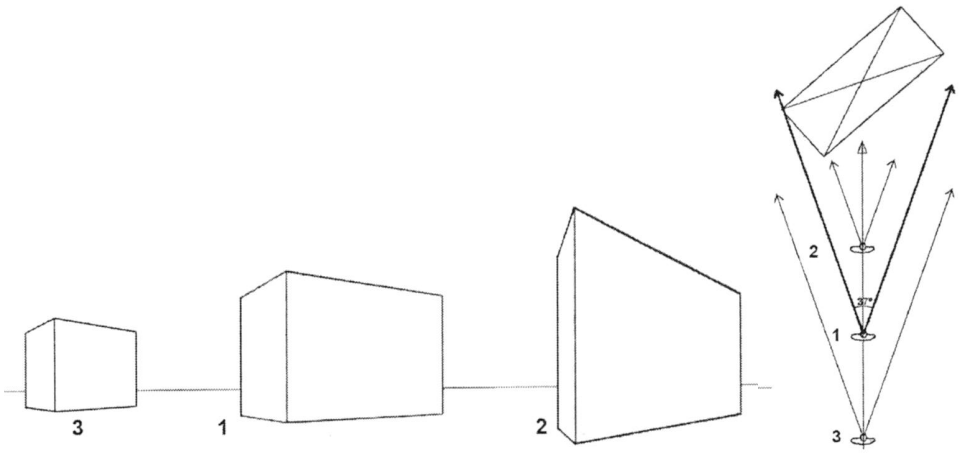

Fig. 2. – Representation in perspective: 1 - normal, 2 - close, 3 – far
(Enache and Ionescu I.,1983)

RESULTS AND DISCUSSIONS

The following are some examples of exercises designed to develop students' space vision and the ability to accurately represent certain volumetric objects in 2 and 3 dimensions (fig. 3, 4, 5).

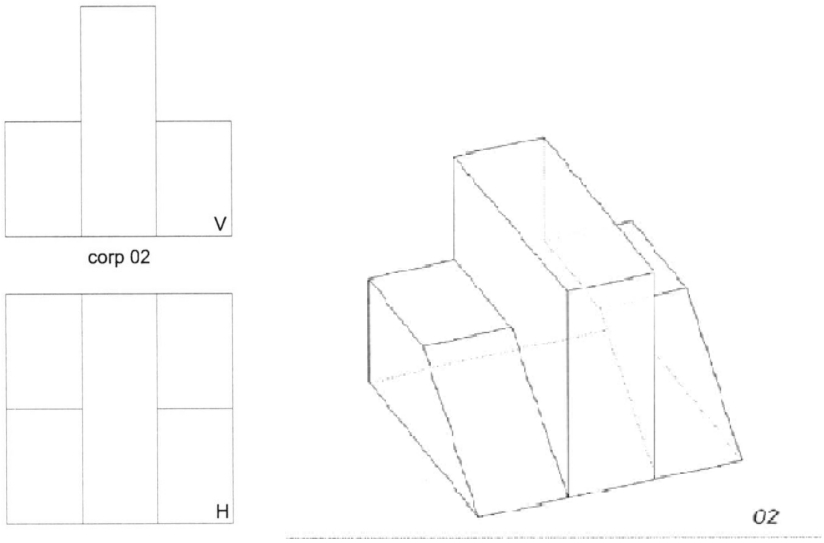

Fig. 3. – Scrubber and downward axonometric representation of a volume
(Ciolacu and Şerban, 2013)

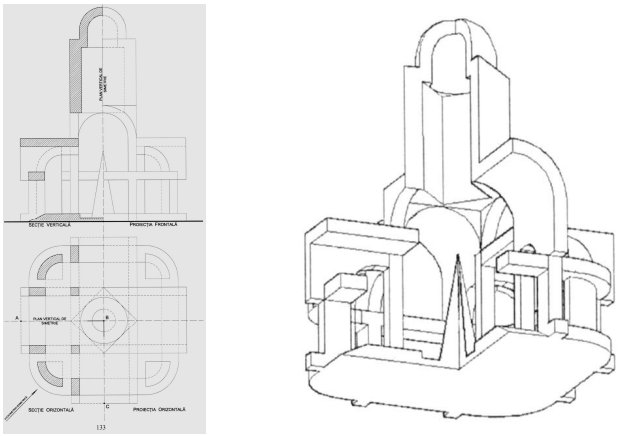

Fig. 4 – Scrubber and bottom axonometric representation of a volume (Ciolacu and Şerban, 2013)

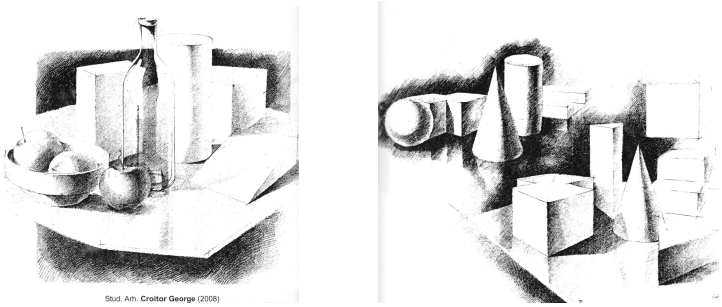

Fig. 5 – Grafic perspective representation of geometric objects and groups (Ciolacu and Şerban, 2013)

In the students landscape projects are pursuing a number of theoretical and practical objectives about spatial composition concepts, or details of steps, stairs, fountains, pergolas and decorative walls. Figure 6 illustrates the images of examples.

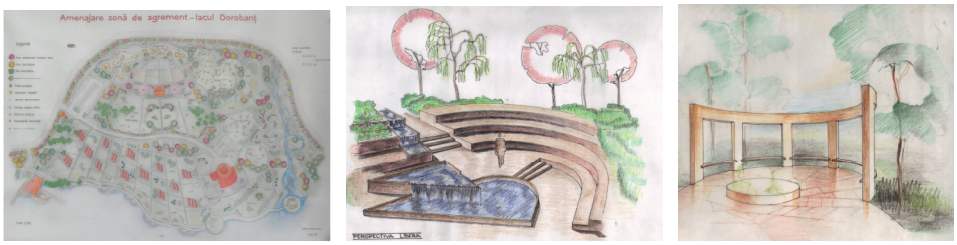

Fig. 6 – Plan and grafic perspective representation of Landscape planning projects of student from 2, 3, 4 year of study (projects conducted under the guidance of Prof. Dr. Arch Dascalu Doina Mira)

When referring to the training requirements of students architects, will find concern for developing spatial artistic sense, through the study of architectural composition of buildings and harmonize the functional needs with aesthetic and volumetric proportions of the facade and overall.

"Practic Architectural Surveying" discipline aims for architecture students to acquire techniques of survey, representation and evaluation of construction. Learning results are expresed in knowledge, technical or professional competency:

- Develop students' ability to observe the composition of a building;
- Observation of construction techniques and materials used in different eras;
- Learning the techniques of preparation of a project - surveying;
- Follow the accuracy of measurements and assuming the role of the architect restaurator.
- Awareness of the role of the architect in the preservation of identity and cultural values, in case of interventions on ancient architectural objects.

These skills and abilities can be followed and measured with this type of completion project stages, which is based primarily on preparing students for technical and artistic drawing, in the first year of study in the disciplines of Descriptive Geometry and Form Study. The catalogue compiled by tutors through summing up the best works of the second year students, realised in the Practice-Surveying on the end of the 2007-2008 school year, is testament to the skills acquired by students during the two years of study (fig . 7) (Nica and Purcaru A., 2009) .

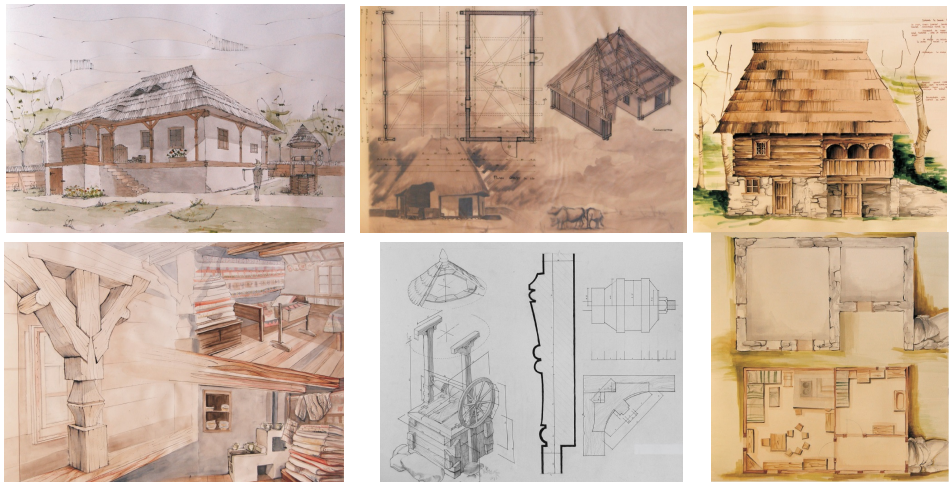

Fig. 7 – Representations plan, facade, axonometric and perspective of objects of traditional architecture specific to different areas of Romania, in the "ASTRA" Museum Sibiu (Nica and Purcaru A., 2009)

If landscape students will devote propensity for plants study and harmoniously bringing them into an existing or future built environment, , architecture students will have particular regard to the technical-utilitarian issues of architectural object, but they will not forget the aesthetic and harmonious integration in the environment (fig. 8).

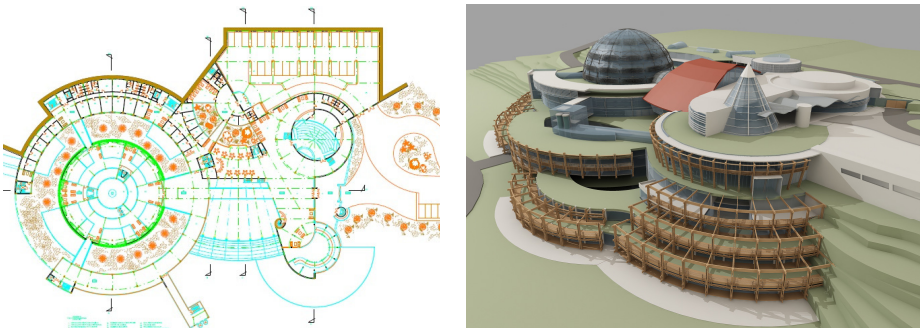

Fig. 8 – Computerised plan and perspective representation of an architect student Diploma project (Purcaru, 2004)

CONCLUSIONS

In conclusion, the requirements for landscape architecture projects are clearly reflected in the practicaly – forming caracter of disciplines Descriptive geometry and perspective representation, Composition, Landscape Design and Teritorial planning.

REFERENCES

1. **Ciolacu Dragoş, Şerban Sorin, 2013 –** *Admitere Arhitectura: Propuneri şi Subiecte*, Ed. Matei Teiu-Botez
2. **Ching Francis D.K., 1979 -** *Architecture: Form, Space & Order*, Published by Van Nostrand Reinhold, New York
3. **Ching Francis D.K., 1995** – *Avizual Dictionary of Architecture*, John Wiley &Sons, New York
4. **Enache Mircea, Ionescu Iulius, 1983** – *Geometrie descriptivă şi perspectivă*, Institutul de Arhitectură Ion Mincu Bucureşti
5. **Nica Răzvan M., Purcaru Andrei (coord.), 2009 –** *Practica Releveu Muzeul Civilizației Populare Tradiționale "Astra" Sibiu 2007-2008,* Univ. Tehnică "Gh. Asachi" din Iaşi, Facultatea de Arhitectură "G.M. Cantacuzino", Princeps Edit, Iaşi
6. **Purcaru Codrina, 2004** – Proiect de Diplomă „*Centru de cercetare şi terapie în Medicina tradițională indiană Ayurveda*", Universitatea Tehnică „Gh. Asachi" din Iaşi, Facultatea de Arhitectură şi Construcții, Iaşi